Yavapai Signal

The Yavapai Amateur Radio Club – Prescott, Arizona – DM-34 – Volume 33 – No. 3 – March 2018

Upcoming Club Events				
Event	**Date**	**Time**	**Place**	**Contact / Info:**
General Meeting	TH 03/01/18	1900 MST	Prescott Rodeo Grounds	Club Website
YARC Breakfast	TH 03/15/18	0800 MST	BackBurner Restaurant, Prescott Valley	Don WB7TPH or Jeff WB7RFY
General Meeting Programs — See page 4.				
Public Event Communications — Schedule— See page 7.				
License Testing — Schedule — See page 9.				
Fox Hunt — Schedule — See page 10.				

YARC:	**Badges**	**Patches**	**Shirts**
Features:	Name & Call	Club Name & Logo	With or Without Name & Call
Contact Person(s):	Mike Reid N7IEP	Mike Reid N7IEP	Pete Morrison K6VVR
Cost:	$7.00 each	$3.00 each	Without Name & Call $20.00 — With Name & Call $24.00 each

Club Website Registration
In order to receive the Signal (the club's official newsletter), you must be a member of the club. Make sure your email is correct by logging into our website (www.w7yrc.org), then clicking on the members tab and viewing your profile.

Welcome to the Yavapai Amateur Radio Club

The Yavapai Amateur Radio Club (YARC) is an ARRL affiliate Special Service Club. The club participates in many activities in the quad-city (Prescott, Prescott Valley, Chino Valley, and Dewey-Humboldt) area by providing communications for local events, emergency communications, and promotion of the hobby throughout the community.

Membership in YARC is open to any interested amateur or non-amateur alike. Dues are $20.00 per year (full-time students $15). YARC general meetings are at 1900 MST on the first Thursday of every month at the Freeman Building, Prescott Rodeo Grounds, 840 Rodeo Drive in Prescott.

www.w7yrc.org

YAVAPAI AMATEUR RADIO CLUB – PO BOX 11994 – PRESCOTT AZ 86304-1994

Club Nets					
Band	**Mode**	**Frequency**	**PL**	**Night**	**Time**
2M	FM	147.260 MHz	+103.5 Hz	Wednesday	1900 MST
2M	SSB (USB)	144.250 MHz	N/A	Wednesday	2000 MST
10M	SSB (USB)	28.440 MHz +/- QRM	N/A	Thursday	2000 MST
1¼M	FM	224.080 MHz	–156.7 Hz	Wednesday	1930 MST
¾M	FM	447.650 MHz	–100.0 Hz	Saturday	0900 MST
Yavapai County ARES/RACES Nets					
2M	FM	147.260 MHz	+103.5 Hz	Monday	1830 MST
2M	FM	145.290 MHz	–127.3 Hz	Monday	1900 MST
Club Repeaters					
2M	FM	146.880 MHz	–100.0 Hz	Open Use 24/7	Open Use 24/7
¾M	FM	447.650 MHz	–100.0 Hz	Open Use 24/7	Open Use 24/7

Share Your Surplus Items

Bring any ham related surplus items that you no longer need to the next club meeting. There will be a table at the meeting where your items can be placed. Let your fellow club member take those things that they want. The table will be available at each monthly meeting.

Canned Food Donations

Bring your non-perishable food items to the monthly club meetings and Terry Pemberton KB7TRE will take them to the local food bank. Give your bagged items to Terry.

New Members

The following new YARC members were voted in at the February 1, 2018 general meeting. Please introduce yourself to them and make them feel welcome:

Keith Schreifels KCØVYQ	**Tyler Schreifels KI7TQE**	**Sherry Schreifels KI7TQD**

From the President's Desk
by Kathy Laing, KJ6KMK

In March YARC will have a new meeting location.

We have been busy this month finalizing a new meeting place for the club. YARC has outgrown our meeting room at the Mile High Middle School and we have been looking for a new meeting location. With the help of Jim Zimmerman N6KZ and Frank Bender K8FB, a new meeting place has been located at the Prescott Rodeo Ground in the Danny Freeman Building. It is a great space with room for all of the members who attend the meetings. We signed the contract with the Rodeo Board and will start our meeting there in March. A huge vote of thanks to Jim and Frank for their efforts on the club's behalf. Please join us at our new location at the Prescott Rodeo Grounds for an **open house** on **February 25** from 1400 to 1600 MST.

The annual **YARC Party** will be held on **April 7, 2018** at the Centennial Center at Antelope Hills at the Prescott Airport. Please be submit your reservation either at the March general meeting or online at

www.W7YRC.org

under <Join Us> and the <Shopping Cart>. The menu and prices are the same this year as they were in 2017.

The 2018 draft budget and the revised YARC Bylaws were emailed to you in February. Please take a few moments to review both documents and send any questions or concerns to me at

kj6kmk.yarc@gmail.com .

Both of these items will be voted upon at the March meeting.

Please look at the request for volunteers that I have posted in this Signal. We need help with a Program Chairman, a Public Service Administrator, and an Assistant Public Information Officer. Anyone who is willing to help can contact me at the above email address. We will give a lot of assistance to anyone who volunteers.

Mike N7IEP

TREASURER'S REPORT Jan 2018	General Fund	Repeater Fund	Prescott Hamfest Fund
BEGINING CASH -December 29, 2017	**7,014.39**	**3,423.32**	**1774.09**
Dues	450.00	50.00	
Donations	20.00	5.00	
50/50 drawing	56.50		
PHF 2018 Registration			40.00
PHF 2018 Ticket Sales			261.00
Misc. < $50	4.60	0.13	(2.64)
TOTAL INCOME	**531.10**	**55.13**	**298.36**
NRA Event – Terry KB7TRE	113.33		
Training Books – Kathy KJ6KMK	134.60		
Appreciation Plaque – Kathy KJ6KMK	78.55		
Misc. < $50	52.00		
TOTAL EXPENSES	**378.48**	**0.00**	**0.00**
CASH – January 31, 2017	**7,167.01**	**3,478.45**	**2072.45**

* * Detailed statements are posted on www.W7YRC.org

General Meeting Programs

February Program – Thanks go to John Broughton WB9VGJ who presented "FT8 – 'A Fast and Furious' Digital Mode" at the February club meeting.

March Program – For the March club program, Doug Theriault NO1D and John Laing K7PRS will be presenting "Part II - Tips to Optimize Your Station and Make It More Effective".

January 25, 2018 Board of Director's Meeting

========== Minutes ==========

Present at Meeting: Kathy-KJ6KMK, Frank-K8FB, David-W7BJ, Joseph-KG6IDN, Art-KA5DWI, John-K7PRS, Mike-N7IEP
Absent: Don-WB7TPH
Meeting called to Order by KJ6KMK at: 1822 MST
Agenda:
Old Business:
The January 2018 board and general meeting minutes and the December 2017 treasurer's report have been published in the February 2018 Signal (general fund - $7014.39, repeater fund - $3423.32, hamfest fund – $1774.09
 A motion was made by John- K7PRS to accept the January 2018 board and general meeting minutes and the December 2017 treasurer's report as published in the February 2018 Signa; seconded by David-W7BJ. Motion passed.
Hamfest update – Frank K8FB
 Site Survey – STEM Bldg. classrooms are small
 Planetarium rental -$650 includes technician operator
 Meeting with Wendy (Arlo Chan's replacement retirement) by January 31
Planning Meeting
 Balloon Launch issue concerns eased.
 January Grand Prize raffle tickets raised $241
Upcoming Programs
Feb – The New FT8 Digital Mode – John Broughton – WB9VGJ
March – Tips to Optimize your station and make it more effective – Doug NO1D & John K7PRS – part II
April – Emergency Preparedness – Terry Schulthneiss – KG7BAM
May – ARRL Arizona Section Manager- Rick Paquette – W7RAP
New Business:
Statehood Day discussion was deferred. Discussion of snack food storage because of meeting relocation.
Discussion of the draft 2018 budget – Mike- N7IEP
 Elmer group activity's donations to be booked and recorded
A motion was made by David-W7BJ and seconded by Mike-N7IEP that Elmer activity donations will be recorded. Motion passed.
 Discussed reason for Hamfest Prize expenditures
 Email of 2018 Budget in February, Vote in March
Review of the proposed changes to the YARC Bylaws – Kathy KJ6KMK
 Discussed:
Membership expiration and forfeiture, Voting process of officers, Treasurer's – Membership maintenance
 Article VII: Remove 51% present requirement.
 Article XI: Budget submission by November 15., Spending authorities revised and raised, insure major expenditure request and informing for requests over $1000.
 Revisions emailed to membership in February for March vote. Discussion of new proposed rules for Public Service Events – Frank K8FB
 New guidelines. 4 Month Notice. Events to be Community, not Quasi-Political
 A motion was made by Mike-N7IEP and seconded by Joseph-KG6IDN to accept the guidelines for Public Service events. Motion passed.
Review of the proposed YARC QSL card & pricing – Kathy - KJ6KMK
 Reviewed several QSL printing resources and costs. Examples of CheapQSLs.com provided.
 A motion was made by Joseph-KG6IDN and seconded by Mike-N7IEP to use CheapQSLs.com for the YARC QSL. Motion passed.
Need some suggestions on volunteers for Program Chair, assistant PIO & Public Service Event Administrator.
 Frank-K8FB mentioned Public Service Administrator's duties are time consuming February-May Open House for new meeting location at Rodeo site.
 Check schedule for February 25
 Sound System and Refrigerator removal and re-location
 Work Party to be formed by Board and volunteers. Discussions between Frank-K8FB and Arizona Section Manager Rick-W7RAP.
 It is important to know what club members need from us as a club.
 Change the application to be a survey.
 Search for Amateur Radio survey forms.
Adjournment: KJ6KMK adjourned the meeting at 20:01 hrs.

February 1, 2018 General Meeting

==========Minutes ==========

Meeting called to Order by KJ6KMK at: 1900 NST; Pledge of Allegiance led by: Kathy-KJ6KMK
Welcome Visitors: Diane Greer (Mother of Stephanie); Joann Newman; Steve Duck – KW7S of Dayton, Oregon
New members: accepted into the club; KCØVYQ – Keith Schreifels; KI7TQD – Tyler Schreifels; KI7TQE – Sherry Schreifels.
 A motion was made by Terry Pemberton – KB7TRE to accept the new member and was seconded by Dave Passell – K6UWV. Motion passed.

Old Business:

The January 2018 board and genral meeting minutes and the December 2017 treasurer's report has been published in the February 2018 Signal (general fund - $7014.39, repeater fund - $3423.32, hamfest fund – $1774.09
 A motion was made by Dave Passell – K6UWV to accept the report and minutes. The motion was seconded by Carol Hills – KA7LKW Motion passed.

Hamfest update – Frank K8FB:
 The café will be open for the hamfest (full service).
 The planetarium presentation is being worked out.
 Drawing for extra raffle tickets for purchasers of $10 for the month to occur at each meeting through May.
 Volunteers can sign up online or here at the general meeting with Art KA5DWI
 Roger KD5VRW announced a youth project to build a 2M tape neasure Yagi antenna on Saturday June 2, 1200-1500 MST Contact Joseph KG6IDN for anyone interested

Award Presentation:

KB7TRE Terry Pemberton was presented an award for his service to YARC. Terry's classrooms have been made available for monthly YARC general meetings for the past 23 years!

New Business:

YARC will have a new meeting place in March. We will be meeting at the Prescott Rodeo Grounds in the Danny Freeman Building. We will have an open house at the new site on Sunday February 25 from 1400-1600 MST.
The draft of the 2018 budget will be sent out in a special email to all members for review. It will be voted on at the March general meeting.
The proposed changes to the YARC Bylaws will be sent out in a special email to all members for review. The new Bylaws will be voted on at the March general meeting.
New rules for public service events will be posted on the club website under the <Public Service Events> dropdown– Frank K8FB
We need some suggestions on volunteers for Program Chair, Assistant PIO & Public Service Event Administrator.

Committee Reports:

YARC Event Communications – Frank K8FB: Thank you to the Sedona Marathon volunteers and suggestions about traffic issues
Upcoming Events: April 14 – Whiskey Basin Trail Run; April 27-29 - Whiskey Off Road Bike Event; May 5 - Whiskey Row Marathon.
Club Repeaters – Pete K6VVR/Doug NO1D: All repeaters are working fine
Fox Hunt – Pete K6VVR/ John WB9VGJ: Credit Union has changed names to OneAZ. Meet at the Prescott Junction afterwards. 2018 Schedule TBD
Elmer Group – Jim N6KZ/KG6AY: January event was take-down of W6CCD Dick Hughes' station. Invite anyone with installs, moves, and take-downs. Also, assistance in getting started.
VE Exam, John WB9VBJ: Tested 13 on January 20. 11 passed (5-Techs, 5-Generals, 1-Extra). Next exam March 17, 2018
YARC Annual Party – April 7, 2018 – Kathy KJ6KMK: Handbills available. Prices and menus for review. Register online at www.W7YRC.org under shopping cart.

Other Additional Business:

Be sure to visit MyARRLVoice.com for the latest information about recent actions of the Board of Directors at the ARRL
February Program: "The New FT8 Digital Mode" – John Broughton – WB9VGJ
Upcoming Programs: March – "Tips to Optimize Your Station and Make It More Effective" – Doug NO1D & John K7PRS – part II; April – "Emergency Preparedness" – Terry Schulthneiss – KG7BAM; May – ARRL Arizona Section Manager- Rick Paquette – W7RAP.
Winner of 50/50 drawing and hamfest ticket drawing: Ken Severence – WA6AQK
Adjournment: KJ6KMK adjourned the meeting at 2037 MST.

2018 Public Event Communications Schedule
1. **Whiskey Basin Trail Run** – April 14, 2018 (MARC) – – Contact Frank Bender K8FB (fhb47@hotmail.com) 2. **Whiskey Off Road Bike Event** – April 27, 28, & 29, 2018 (MARC) – – Contact Frank Bender K8FB (fhb47@hotmail.com) 3. **Whiskey Row Marathon** – May 5, 2018 (MARC) – Contact John Broughton WB9VGJ (wb9vgj@arrl.net) 4. **Chino Grinder** – May 5, 2018 – Contact Bob Thompson KC8BOB (bobnstar@cableone.net) 5. **Groom Creek Mountain Mayhem** – May 2018 (MARC) – Contact: Dottie Akers WF7DS (dottie.akers@gmail.com) 6. **Yarnelll Memorial Run** – June 2, 2018 – Contact Doug Jarmoth N0DAJ (n0daj1950@gmail.com) 7. **March of Dimes Walk for Babies** – August 2018 – Need Coordinator 8. **Skull Valley Loop Challenge** – September 2018 – (MARC) Contact Dottie Akers WF7DS (dottie.akers@gmail.com) 9. **Groom Creek Classic** – September 2018 (MARC) – Contact Dottie Akers WF7DS (dottie.akers@gmail.com) 10. **Prescott Road Rally** – October 2018 (MARC) – Contact Bob Rosevear WB7RRQ (rosevear520@cableone.net\) 11. **Man/ Horse Race** – October 2018 – – Need Coordinator 12. **Diabetes Walkathon** – October 2018 – Contact John Broughton WB9VGJ (wb9vgj@arrl.net)
A special thank you to everyone who has volunteered for one of these events. Your participation is essential to the success of our public service events and is greatly appreciated.

Public Event Communications — Volunteer Sign-ups
We are now accepting volunteer sign-ups for the following events: **Whiskey Basin Trail Run (Prescott Circle Trail) – April 14, 2018** (https://www.aravaiparunning.com/whiskey-basin/) **Whiskey Off Road Bike Event – April 27, 28, & 29, 2018 (MARC) — Contact Frank Bender K8FB (fhb47@hotmail.com)** ARES/RACES is providing the MARC communications vehicle and a net control operator for these (except the Chino Grinder because of a conflict with the Whiskey Row Marathon) events.two events. Public service events are a major focus of our club's activities. Come out, improve your emergency preparedness, improve your operating skills, and assist your community. Don't worry if you are inexperienced. We will team you up with someone who can show you the ropes. You don't have to be a YARC member to participate. If you wish to sign up for one of these events, contact Frank Bender K8FB (k8fb@w7yrc.org). You can find these and other upcoming public service events on the club website at http://www.w7yrc.org/public-service- events/ .

Volunteers Needed for 2018
Program Chairman – Don Bauer, WB7TPH, has been the Program Chair, but due to other responsibilities would like to retire from this position. The program chair is responsible for obtaining speakers for the club meetings each month. Please send me an email to KJ6KMK.YARC@gmail.com if you are interested. Public Service Event Administrator – Need a volunteer who will help find event coordinators if one is not identified and ensure the required paperwork is completed for each event. Public Information Officer (PIO) – Don Bauer, WB7TPH is the current PIO; however he needs a second-in-command willing to learn how to work with the media to publicize the club's activities. If you are interested in learning how to work with the media or have experience working with the media, Don would really ike to hear from you.

February 25th New Meeting Place Open House

Beginning March 1, 2018, YARC will be meeting at the Freeman Building at the Prescott Rodeo Grounds. An open house will be held from 1400 to 1600 MST on Sunday, February 25 at the Freeman Building. See the club website for driving directions:

www.w7yrc.org

New Location for YARC's Monthly Meetings

Starting with the MARCH 1, 2018 general meeting, the YARC monthly meetings will be held at the Prescott Rodeo Grounds off Miller Valley Road in Prescott. The meetings will be held in the Danny Freeman Building, a very nice rock building on Rodeo Drive – name is on the front of the building.

In our search for a new meeting place we had certain criteria and this site met most of our needs. It will hold up to 175 members, has ample parking , good lighting and is accessible for members via a ramp. There is also a small kitchen and a pass-through bar for our refreshments.

The doors will not be open until 1800 MST on meeting nights, but this will still give us ample time for set-up prior to the meeting start at 1900 MST.

To introduce everyone to our new site, YARC will host an open house on Sunday, February 25, 2018 from 1400 to 1600 MST. There will be refreshments and a chance to see the new meeting building. There are directions to the new location on theYARC website:
www.W7YRC.org .

Hope to see you at the Open House on February 25!

FT-8 Operating Guide

Interested in FT-8? You should be. Whether it's a mode you want to try or whether you want learn what has grabbed the interest of so many hams like no other digital mode, this operating guide by Gary Hinson - ZL2IFB – will give you a very good understanding of the mode, its implementation, and its worldwide usage.

If you have some experience with FT-8, please read through the FT-8 Operating Guide:

http://www.g4ifb.com/FT8_Hinson_tips_for_HF_DXers.pdf

YAVAPAI Amateur Radio Club
PRESCOTT, ARIZONA

2018 Prescott Hamfest at ERAU

The 2018 Prescott Hamfest at ERAU will be held on June 1 and 2 at Embry-Riddle Aeronautical University (ERAU). This year's hamfest will be a full two day event with lots of activities and a balloon launch by the Arizona Near Space Research (ANSR).

The Prescott Hamfest at ERAU is co-sponsored by the Eagle Amateur Radio Club (EARC) at ERAU, YARC, and the Amateur Radio Council of Arizona (ARCA). The hamfest is also an ARRL sanctioned hamfest and we will be hosting the 2018 Arizona State ARRL Convention. You can find details at www.prescotthamfest.com .

Special Grand Prize Ticket Offer to YARC Members

Congratulations to Ken Severance WA6AQK who won February's drawing for 20 hamfest raffle tickets.

This is a special offer for YARC members. Each month, for those members who make at least one purchase of Grand Prize Raffle Tickets online, your name will be put in a drawing to be made at the next club meeting. The winner of the drawing will be awarded 20 Grand Prize Raffle Tickets. At the March 1 club meeting, members who purchase at least $10 worth of raffle tickets during the meeting will also have their name entered in the drawing.

A drawing will be held each month through May for ticket purchases made during the previous month only. The ticket drawing will be done after the break in the meeting. A member's name can only be entered one time each month, regardless of how many tickets are purchased that month. Raffle tickets can be purchased online by using PayPal or a credit card by going to http://hamfest.w7yrc.org/prizes/ . You can also purchase tickets at the club meeting to be entered into the drawing. The list of current grand prizes can also be found at this site.

Hamfest Volunteers

If you would like to volunteer to help out during the hamfest, go to: http://hamfest.w7yrc.org/volunteer/ , fill out the volunteer form with your preferences and submit the form or contact Art Jackson KA5DWI (ka5dwi@yahoo.com). If you would like to help with the hamfest planning, contact Frank Bender K8FB at k8fb@w7yrc.org .

Upcoming License Testing

Date	City	Location	Time	Sponsor	Contact	Walk-in
03/06/18	Prescott Valley	Trinity Lutheran Church, 3950 Valorie Dr.	1830 MST	PV Ham Study Group	Jim Scherfling 928-632-2050	Yes
03/17/18	Prescott	Jeep Posse Building	0900 MST	YARC	Don Bauer 928-775-4690	Yes

License Test Preparation Classes

An entry-level class is scheduled to begin in February to prepare participants for the Technician Class amateur radio license examination. The two-day class will be held on Saturday, February 24 and Saturday, March 3, 2018. These classes are meant to prepare students to take the examination scheduled for March 17, 2018.

For more information or to pre-register for the test (strongly recommended), go to this website:

http://www.w7yrc.org/arrl-vec .

Follow the steps to use the online pre-registration form.

Club Station March Programs

The following are the planned activities for the club station in March:

- Friday March 2 – 1900 MST – the Club Station will be open for HF operation and tutoring on a one on one basis by appointment only. Operate the club stationin a non-intimidating environment. This activity is targeted to the beginner or inexperienced ham and is open to any interested person. Contact Jim Zimmerman N6KZ (n6kzdx@gmail.com).
- Sunday March 4 – 0800 to 1700 MST– The club station will be open to operate the ARRL SSB DX Contest – by appointment only. This activity is targeted to anyone in the club who wants to do some operating using the club station and get some exposure to HF contesting. The focus of this activity is enjoyment. If interested in participating, please let Frank Bender K8FB (k8fb@w7yrc.org) know.
- Friday March 16 – 1900 MST – the Club Station will be open for HF operation and tutoring on a one on one basis by appointment only. Operate the club station in a non-intimidating environment. This activity is targeted to the beginner or inexperienced ham and is open to any interested person. Contact Art Protas KG6AY (kg6ay@protas.org).
- Saturday March 24 – 0800 to 1700 MST– The club station will be open to operate the CQ World Wide WPX SSB Contest. This activity is targeted to anyone in the club who wants to do some operating using the club station and get some exposure to HF contesting. The focus of this activity is enjoyment. If interested in participating, please let Frank Bender K8FB (k8fb@w7yrc.org) know, just to make sure he is there when you plan on stopping by.
- Sunday March 25 – 0800 to 1700 MST – The club station will be open to operate the CQ World Wide WPX SSB Contest. This activity is targeted to anyone in the club who wants to do some operating using the club station and get some exposure to HF contesting. The focus of this activity is enjoyment. If interested in participating, please let Frank Bender K8FB (k8fb@w7yrc.org) know, just to make sure he is there when you plan on stopping by.

Amateur Radio Direction-finding Transmitter Hunt Schedule — Calendar Year 2018

by Pete Morrison, K6VVR

Meet at 1300 MST in the parking lot of the AZOne Credit Union behind Walgreens near the corner of Willow Creek Road and Gail Gardner Way in Prescott. Contact Pete Morrison K6VVR or John Broughton WB9VGJ for additional information.

Month	Day of the Month	Day of the Week
January	7	Sunday
February	4	Sunday
March	10	Saturday
April	8	Sunday
May	6	Sunday
June	16	Saturday
July	8	Sunday
August	5	Sunday
September	9	Saturday
October	7	Sunday
November	4	Sunday
December	9	Saturday

Sun Power
by Bob Swarm, K3CKO

Are you paying your local utility company for the privilege of operating your ham radio station? What happens when the winter storm knocks out your power for hours? Does your 12 ampere hour gel cell for QRP go dead when you are miles from the nearest utility? Why not plug into the sun?

I have a half acre plot located across the road down by the river. We do a lot of gardening and have a orchard on this lot. There is no AC power available so in 2003 I mounted a 15 watt Coleman solar panel on the side of my tool shed and set up the charge controller to charge a deep cycle marine battery inside the shed. I then wired 12 volt lights in the shed and one over the outside door. I connected my Ten-Tec Omni D to the battery and run up a center fed 40 meter Zepp and had a fun evening. It worked so well I tried again the next evening. The small dome light from a camper and the 100 watt rig worked just fine for the four hours I could operate. The solar cell had it topped off and ready to go the next evening.

My garden experiment worked so well that a few years later I mounted the Coleman panel on the roof of my ham shack and the battery under the operating bench. It still powers my modern Ten-Tec Eagle any time I have sunshine, even in winter. There are a few times when I have to switch onto the AC power supply.

Last year I started playing with QRP. I have built 3 QRP Kits now and have operated several times in the National Parks On The Air and other portable sites. For power I use two 12 ampere hour gel cells one of which I keep connected to a 12 volt solar panel while I am operating with the other one. This works well as long as I don't try running contests.

To solve the contest problem I purchased a 20 watt polycarbonate solar panel from my favorite electronics warehouse (Amazon). I set up this panel with an Allpowers 2 amp charge controller and mounted it along with a deep cycle marine battery onto a two wheel dolly. I can pull this setup anywhere I want and set it to face the sun path. The optimum is tilted 30 degrees up from the ground and facing south. Last Sunday I operated The Adventure Radio Society's 2017 Flight of the Bumblebees contest in my old garden shack down by the river.

Remember to service your batteries. Deep cycle marine batteries need to have water added a couple times a year.

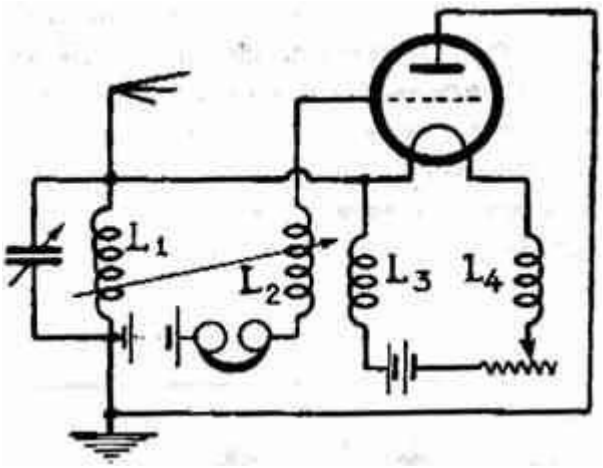

Service Award to Terry Pemberton, KB7TRE
At the February 1, 2018 general meeting, a special Service Award was presnted to Terry Pemberton, KB7TRE (shown on the left side of the above photograph) by club President Kathy Laing, KJ6KMK (above right). Terry has been providing the classrooms for YARC general meetings for the past 23 years, including rooms at Granite Mountain Middle School and Prescott Mile High Middle School. Our last meeting was held at Mile High on February 1, and we will be moving to the Freeman Building at the Prescott Rodeo Grounds for the March 1, 2018 and subsequent meetings. (Photo courtesy of Joe Thomas, KG6IDN)

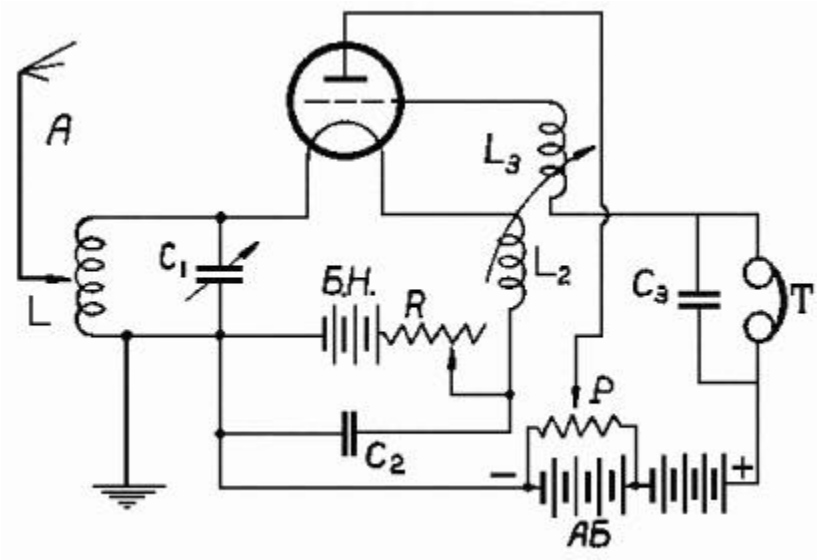

February 2018 Foxhunt
by John Broughton, WB9VGJ

The monthly foxhunt was held Sunday, February 4, 2018. Jeff WB7RFY, Joan KI7PWA, Gary K6JXM, and John WB9VGJ were the foxes. There were two teams for this hunt: 1) Pete K6VVR, Dave W7BJ, Diane KE7ODP; and 2) Robert WA6FBA, Bob WB6ODR, Gary K6JXM, and Steve KW7S.

The results of the hunt were:

Place	Team	Time
1	WA6FBA, WB6ODR, and KW7S	25 min.
2	K6VVR, W7BJ, and KE7ODP	1 hr. 22 min.

We were joined by a new hunter for this hunt: Steve, KW7S. He enjoyed the hunt and said he plans on attending future hunts. It is good to see new hunters getting involved. Joan and Gary have already gotten hooked. She, Gary and Steve learned several things about hunting hidden transmitters on this hunt.

Jeff had chosen the roundabout at the entrance to the new The Dells subdivision south of 89A and east of 89. We had a problem at the start of the hunt in that the signal from the primary transmitter could not be heard at the starting point. Once we replaced the vertical whip with a beam, the signal could be heard.

The primary transmitter was hidden in in the roundabout and the secondary transmitter was hidden inside the frame of one of the push-loading wheel tractor-scrapers.

The area south and east of the roundabout is currently being graded and prepared for building many more houses. I don't recall seeing so many earth moving machines in one place before. You can get an idea of how much equipment was there in some of the pictures. We had a few folks walking or driving by and one car stopped to talk to see what we were doing. It is always nice to have people ask us so we can explain hidden transmitter hunting to them. Jeff and I ran into a very friendly dog a couple was walking when it ran up to us to meet us.

You can see pictures of the hunt here:

https://tinyurl.com/YARCFoxhuntFebruary2018

W7YRC 2M FM Net — 147.260 MHz, PL +103.5 Hz — Wed., 1900 MST Note: NCS = Net Control Station					
Call	Name	01/24/18	01/31/18	02/07/18	02/14/18
AE7CG	Loren	NCS	NCS	NCS	NCS
K6VVR	Pete	x	x	x	x
K7DCT	Andrew	x			x
KA5DWI	Art	x		x	x
KF7ANX	Frank	x	x		x
KF7FPD	Jerry	x	x	x	
KF7PQV	Dan	x	x	x	x
KG6AY	Art	x		x	x
W7HAM	Ralph	x	x	x	x
WA6AQK	Ken	x	x	x	x
WN7E	Tom	x	x	x	x
KF7INF	Dennis	x	x		
KG7EWD	Patrick	x		x	x
KG7GLK	Neil		x		x
KG6IDN	Joe	x		x	
WA6FBA	Robert	x	x	x	x
NO1D	Doug	x		x	x
KI7LXI	Sheila	x		x	x
KI7LWZ	Mike		x	x	
K7LMJ	Mike			x	
KD7OIW	Peter		x	x	
K6PSR	Tony			x	
N7NGM	Rex	x			

Breakfast and Lunch Gatherings

There are a number of lunch and breakfast gatherings in the area that are open to all radio amateurs and interested persons. Please let us know of any updates or corrections at info@w7yrc.org .

Third Thursday of the Month – **YARC** holds an informal **breakfast** gathering at the **BackBurner** Restaurant at 0800 MST. The restaurant is at 8400 Long Mesa Drive in Prescott Valley. Contact Don Bauer WB7TPH or Jeff Hanna WB7RFY.

Second Tuesday of the Month – **Quarter Century Wireless Association (QCWA) brunch** gathering, 1030 MST to 1230 MST at the **Golden Corral** Restaurant in Frontier Village in Prescott, off Highway 69. You do not have to be a QCWA member to attend.

Every Monday – **Dan Nichols (W6SAK SK) Memorial Lunch**, 1100 MST to 1230 MST at **roving locations.** Contact Bob Rosevear WB7RRQ, 928-458-7830, rosevear520@cableone.net; or Bob Smith WB6ODR, 928-443-9321, lrsmith@cableone.net for the next location.

Every Wednesday – **Breakfast** at 0700 MST at the **Manzanita Grill** at the Antelope Hills Golf Course, near the Prescott airport.

Every Wednesday – **Lunch** – 1100 MST at **Costco** — "The Umbrella Club"

Club Officers, 2018			
Officer	**Name**	**Call Sign**	**Email Address**
President	Kathy Laing	KJ6KMK	kj6kmk.yarc@gmail.com
Vice President	Joseph Thomas	KG6IDN	vice.president@w7yrc.org
Treasurer	Mike Reid	N7IEP	treasurer@w7yrc.org
Secretary	Art Jackson	KA5DWI	secretary@w7yrc.org
Director	Don Bauer	WB7TPH	wb7tph@w7yrc.org
Director	David Hanson	W7BJ	w7bj@wq7yrc.org
Director	John Laing	K7PRS	k7prs@w7yrc.org
Director	Frank Bender	K8FB	fhb47@hotmail.com
Editor Emeritus	Joseph Oliver	AC6AA	joliver@cableone.net
Editor	Loren Singh	AE7CG	ae7cg@arrl.net
Webmaster	Randy Dashiell	W6TYV	webmaster@w7yrc.org

Yavapai Amateur Radio Club — W7YRC Club Station Access List — Effective January 26, 2017				
Name:	**Call:**	**Lic. Class**	**Notes:**	**Telephone:**
D. Hanson	W7BJ	E	Dual Member	602-615-3444
R. Mauldin	N7NGM	E	Rotating Member	277-7164
M. Bélanger	W1DGL	E	Rotating Member	420-0498
R. Redford	KG7LMI	G	Rotating Member	623-252-3980
T. Jackson	K6PSR	G	Rotating Member	562-644-0528
F. Bender	K8FB	E	Station Manager	379-5575
J. Zimmerman	N6KZ	E	Elmer Group	713-0542
A. Protas	KG6AY	E	Elmer Group	227-2954
D. Freeman	KV8TD	E	N7GMH Trustee	759-0958
B. Vlastelich	K7TSY	E	License Classes	583-7572
R. Dashiell	W6TYV	G	Dual Member	602-501-2571
Note: K. Laing KJ6KMK; P. Morrison K6VVR; B. Semon N7CW; and D. Bauer WB7TPH have station access, but are not to be contacted for station access.				